CHAPTER 151

UNIVERSITY ROYAL NAVAL UNITS

(Sponsor: NAVY TRG BRNC-CDRU)

CONTENTS

SECTION 1 – INTRODUCTION

Para
15101. University Service Units
15102. Universities Department
15103 University Royal Naval Units Sub-Department
15104. Royal Naval Reserve List 7

SECTION 2 – COMMAND

15105. Commanding Officer
15106. Commander Universities
15107. Officers-in-Charge
15108. Coxswains (Second-in-Charge)

SECTION 3 – UNIVERSITY ROYAL NAVAL UNITS SUB-DEPARTMENT

15109. Chief of Staff University Royal Naval Units
15110. University Staff Coxswain
15111. University Royal Naval Units Administration Officer
15112. Regional Administration Officers
15113. Universities Department Support Officer

SECTION 4 – NATIONAL LAYDOWN

15114. University Royal Naval Units
15115. National Training Centre
15116. Regional Construct
15117. Regional Chiefs of Staff

SECTION 5 – UNIT MANAGEMENT

15118. Unit Structure
15119. Officer-in-Charge
15120. Coxswain (Second-in-Charge)
15121. Senior Training Officer
15122. Senior Midshipman
15123. Deputy Senior Midshipman
15124. Gunroom Mess Committee
15125. Gunroom Mess
15126. Unit Standing Orders
15127. Weekly Orders
15128. Training Night Routine

15129. Regional Support Units
15130. Assurance
15131. Periodic Books
15132. Compliance Management Tool
15133. Warnings & Administrative Process
15134. Welfare Support
15135. Military Education Committee
15136. Reserve Forces & Cadets Association
15137. Affiliated Organisations

SECTION 6 – VOLUNTEERS (STUDENTS & TRAINING OFFICERS)

15138. Recruitment
15139. Entry Requirements
15140. Selection Boards
15141. Administration
15142. Career
15143. Training
15144. Promotion
15145. Accelerated Officers Programme
15146. Service Entry
15147. Leaving

SECTION 7 – SPONSORED UNDERGRADUATES

15148. Sponsored Undergraduate Office
15149. Drummond Division
15150. Jolly Division
15151. University Cadet Entry
15152. Affiliation of Sponsored Personnel

SECTION 8 – MEDICAL ADMINISTRATION

15153. Introduction
15154. Review
15155. Caldicott Principles
15156. Initial Application
15157. Medical Categories
15158. Appeals
15159. Risk Assessments
15160. Volunteers (Training Officers)

SECTION 9 – UNIFORM AND INSIGNIA

15161. University Royal Naval Units Rank Insignia

ANNEXES

Annex 151A: URNU Training Cadre Volunteer Agreement (Amendment 1 dated 23 May 24)
Annex 151B: URNU Pre-JMES Award Risk Matrix
Annex 151C: Notification to Commands on the Change of Medical Circumstances
Annex 151D: URNU Recruitment Medical Flowchart
Annex 151E: URNU Activity Participant Declaration Form

CHAPTER 151

UNIVERSITY ROYAL NAVAL UNITS

SECTION 1

INTRODUCTION

15101. University Service Units

University Service Units (USUs) is the collective term used by the Ministry of Defence (MoD) for the Royal Navy's (RN's) University Royal Naval Units (URNUs), the British Army's Universities Officer Training Corps (UOTC) and the Royal Air Force's Universities Air Squadrons (UAS). The USUs aim to provide leadership development, military experience and adventurous activity to students in treachery education. USUs normally come under the direction the Command which is responsible for officer training within their respective service, either being part of or administered by the Reserve Forces. The students recruited into the USUs have no call-up liability or war role.

a. The URNUs come under the authority of Director People & Training (Dir P&T), who delegates Command of the URNUs to Captain Britannia Royal Naval College (Capt BRNC), DARTMOUTH. Dir P&T specifically retains the following functions:

(1) Definition of the URNU Mission Statement.

(2) Overall disposition of the URNUs.

(3) Composition and choice of sites and leasing arrangement for the URNUs.

(4) Personnel matter including remuneration, conditions of service and the Unit Establishment Lists.

(5) Uniform requirements.

b. Dir P&T delegates the budgets for the URNUs to Commander Universities (Cdr U) as the budget holder.

15102. Universities Department

The Universities Department is part of BRNC, DARTMOUTH, headquartered within the College. The department is divided into two sub-departments, the University Royal Naval Units (URNUs), which operates the URNUs and the Sponsored Undergraduates (SUs), which administers the RN's degree schemes including Medical Cadetships, University Cadet Entry (UCE), RN Defence STEM Undergraduate Scheme (DSUS), in service degree schemes, scholarships and legacy bursaries (SU regulations are found in BRd 3(1) Ch 17).

15103. University Royal Naval Units Sub-Department

The URNU sub department consists of the URNU Headquarters (URNU HQ), the URNUs and the URNU National Training Centre (URNU NTC). The URNU HQ is responsible for the operation of the 16 physical and one virtual URNUs spread across the United Kingdom (UK). Each of the 17 URNUs is a subordinate-unit (sub-unit) of BRNC, with the 16 physical URNUs being lodger unit of another MoD establishment. URNU Virtual is operated by the permanent staff of another URNU.

15103. Royal Naval Reserve List 7

Royal Naval Reserve (RNR) List 7 is designated for volunteers in the URNU and sponsored personnel on the RN DSUS (see para 15158). Personnel are place on List 7 for administrative purposed only (including remuneration) and have no call-up liability or war roll. This is unique to the needs of URNU and RN DSUS personnel.

List 7 is sub-divided as follow:

a. **List 7A.** Volunteers, appointed as Honorary Officers in the URNU Training Cadre to support the operation of the URNUs[1].

b. **List 7B.** Students, in treachery education, who volunteer in the URNU.

c. **List 7C.** Students who are on the RN DSUS.

Figure 151-1. Universities Department Structure Chart

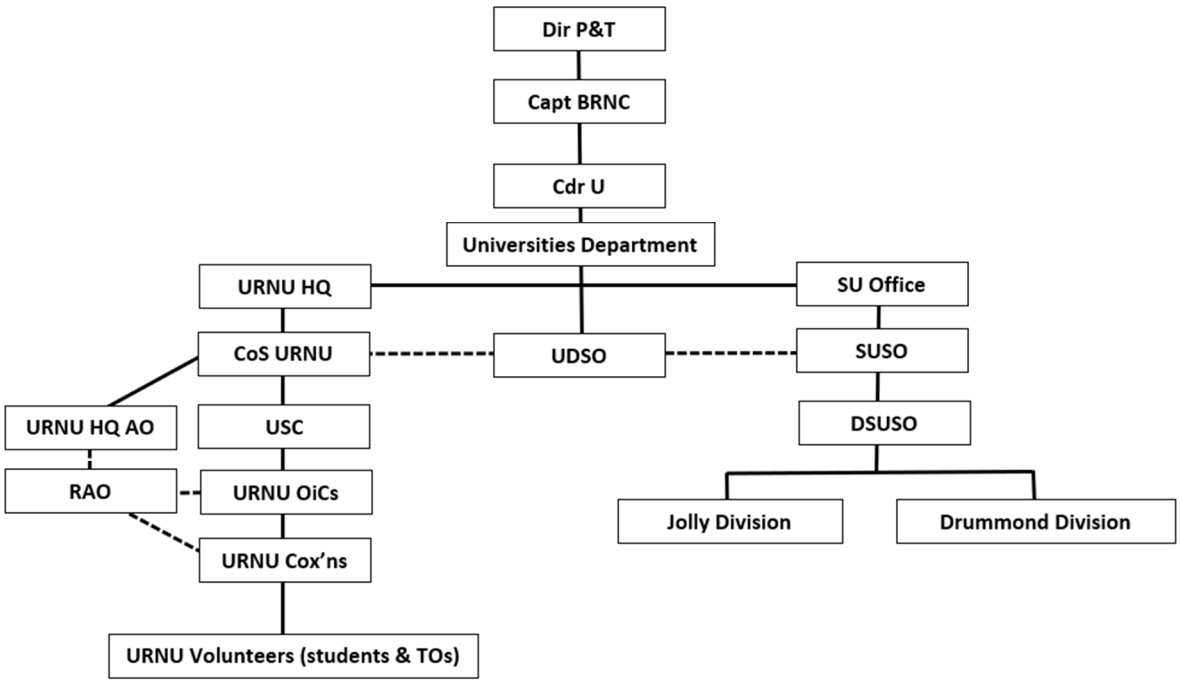

[1] They are 'Remunerated Volunteers' with a similar status to the Cadet Force Adult Volunteers (CFAV) of the MoD-sponsored Cadet Forces.

SECTION 2

COMMAND

15105. Commanding Officer

The Capt BRNC, DARTMOUTH is the Commanding Officer (CO) of the URNUs. As CO of the URNUs Capt BRNC delegates specific operational, administrative and Command functions for the URNUs, these delegations are detailed in a BRNC Captain's Temporary Memoranda (CTM), which is reissued on change of delegations or on Supersession of Command.

a. Capt BRNC retains specific responsibility for:

(1) Definition of the training syllabus and associated documentation.

(2) Promulgation of orders and assurance of standards in the URNUs.

(3) Liaison with university authorities and Military Education Committees (MECs). Hosting of the Council of Military Education Committees, Annual General Meeting (triennial rotation with the Army and RAF).

(4) Responsibility to Dir P&T for legal advice and disciplinary matters for RN and RNR List 7 personnel volunteering in the URNUs.

b. Capt BRNC is the Second Reporting Officer (2RO) for all OF3 Officers-in-Charge (OiC), Chief of Staff URNU and Third Reporting Officer (3RO) for all OF2 OiC and the University Staff Coxswain as required.

15106. Commander Universities

Cdr U is the Head of Department (HoD) for the Universities Department and is responsible to Capt BRNC for the management and operation of the Universities Department, including the URNUs and URNU NTC. Cdr U is the 1RO for all OF3 OiC and CoS URNU, 2RO for all OF2 OiCs and 3RO for all Cox'ns as required.

15107. Officers-in-Charge

Each URNU is led by an OiC who is normally a senior OF2, on occasion an OF3, from the RN or Royal Marines (RM). The OiC is responsible to Cdr U and Capt BRNC for the leadership, management and routine operation of the specific URNU to which they are assigned, in extremis an individual may be assigned as OiC for multiple units. Capt BRNC will delegate specific operational, administrative and Command functions to the OiC, such delegations are detailed in a BRNC CTM (see para 15105).

15108. Coxswains (Second-in-Charge)

Each URNU has a Coxswain (Cox'n) who is Second-in-Charge (2iC) of the unit. The Cox'n will normally be an experienced OR7, they are engaged as Full Time Reserve Service (Full Commitment) (FTRS(FC)). They are responsible to the OiC for the Executive function and internal management of the URNU to which they are assigned. In extremis a Cox'n may be assigned as 2iC for another unit.

SECTION 3

UNIVERSITY ROYAL NAVAL UNITS SUB-DEPARTMENT

15109. Chief of Staff University Royal Naval Units

The Chief of Staff University Royal Naval Units (CoS URNU) is the head of the URNU sub-department and responsible to Cdr U and Capt BRNC for the executive management and routine operation of the sub-department, including URNU HQ, the URNUs, the URNU NTC and deputising for Cdr U as required. CoS URNU has functional authority over all URNU personnel, including permanent staff, civil servants and volunteers (students and Training Officers (TOs)). CoS URNU is 1RO for all OF2 OiCs and the University Staff Coxswain, the 2RO for all Cox'ns and the 3RO for all TOs as required.

15110. University Staff Coxswain

The University Staff Coxswain (USC) is responsible to CoS URNU for the effective internal management and routine operation of URNU HQ and the URNUs. USC has functional authority over all unit 2iCs, civil servants and volunteers (students and TOs), deputising for CoS URNU as required and providing the equivalent of the Executive Warrant Officer (EWO) function for the URNU sub-department.

15111. University Royal Naval Units Administration Officer

The University Royal Naval Units Administration Officer (URNU AO) is a civil servant in URNU HQ who supports the URNU sub-department. They are the subject matter expert (SME) for the sub-department in all areas of administration, including the full range of digital administration services, policy expertise in the logistics and administrative function and responsibility for the secretarial function of URNU HQ. The URNU AO will routinely consult with regional and unit staff to support best practice across the sub-department in administrative matter especially pay, allowances and digital services.

15112. Regional Administration Officers

There are eight Regional Administration Officers (RAOs), they are spread across the UK with each RAO working out of an URNU, normally this is the unit geographically closest to the RAO's place of residence. RAOs will cover multiple URNUs based on the regional model used by the URNU which mirrors the Naval Regional Command (NRC) construct.

a. Each RAO is accountable to the Cox'ns of the units they are assigned to with the host unit's permanent staff acting as the RAO's Functional and Line Manager. The RAO will conduct the administration of the units they are assigned to. They will support both individual units and wider regional business, pursuant in supporting the effective operation of the URNU sub-department, under the direction of URNU HQ.

b. RAOs have functional authority over all volunteers in the URNU in the conduct of their duties.

15113. Universities Department Support Officer

The Universities Department Support Officer (UDSO) is a civil servant in the Universities Department who works across both the URNU and SU sub-departments. The UDSO is primarily the budget manager for the Universities Department budgets. The UDSO is also the electronic procurement card (ePC) manager and Motor Transport Officer (MTO) for the URNU. They also support the department as the SME for civil service line management and policy, being the senior civil servant in the department.

Figure 151-2. URNU Administrative Structure Chart

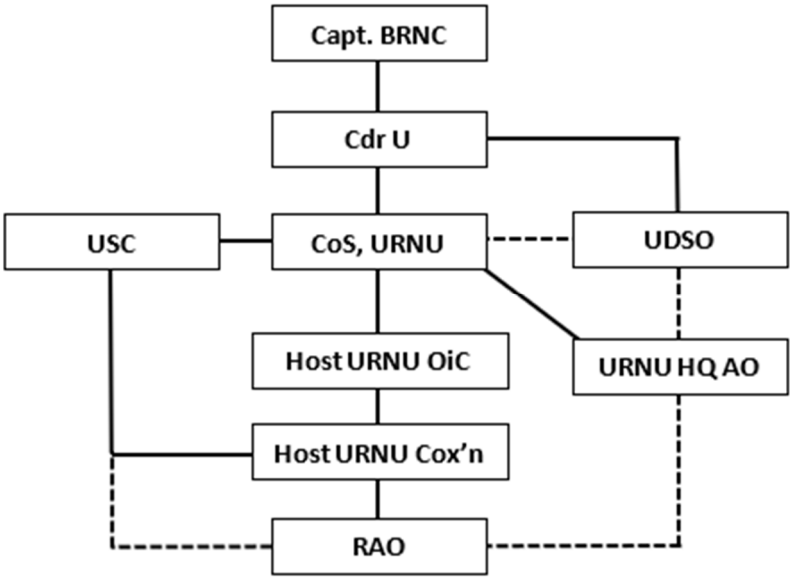

SECTION 4

NATIONAL LAYDOWN

15114. University Royal Naval Units

The URNUs are independent sub-units of BRNC, DARTMOUTH, there are 16 physical units and one virtual. These 16 units are lodger units of other MoD establishments, the virtual unit is administered by the permanent staff of a physical URNU. Below are listed the URNUs and their locations.

URNU	Date Established	Location
Belfast	2021	HMS Hibernia, Lisburn
Birmingham	1994	HMS FORWARD, Birmingham
Bristol	1986	HMS FLYING FOX, Bristol
Cambridge	1994	Army Reserve Centre, Cambridge
Devon	2016	HMS VIVID, Devonport
East Midlands	2021	HMS SHERWOOD, Nottingham
East Scotland (nee Aberdeen)	1967	Hepburn House, Edinburgh
Glasgow	1972	95 University Place, Glasgow
Liverpool	1972	HMS EAGLET, Liverpool
London	1985	HMS PRESIDENT, London
Manchester	1986	University Barracks, Manchester
Northumbria	1994	HMS CALLIOPE, Gateshead
Oxford	1994	Falklands House, Oxford
Solent (Southampton & Sussex 1972)	2021	HMS KING ALFRED, Portsmouth
Virtual	2021	Online
Wales	1994	HMS CAMBRIA, Cardiff
Yorkshire	1994	Carlton Barracks, Leeds

15115. National Training Centre

The URNU NTC is based at the Army Reserve Centre, Coldhams Lane, Cambridge, sharing facilities with URNU Cambridge. The NTC is the sub-department's Royal Yachting Association (RYA) training centre, operated by a civil servant who is the Executive Officer (EO) of the NTC. OiC URNU Cambridge is responsible for overseeing the NTC and is both the Functional and Line Manager for the EO. EO NTC is responsible to URNU HQ for the delivery of RYA accredited training, routinely to URNU volunteers (students and TOs) and on an ad hoc basis to service personnel.

15116. Regional Construct

The URNUs are divided regionally in line with the NRCs, each URNU region is administered by a Regional Chief of Staff (RCoS). The URNUs are divide as below:

a. Scotland & Northern Ireland – Belfast, East Scotland, Glasgow

b. Northern England – Liverpool, Manchester, Northumbria, Yorkshire

c. Eastern England – Cambridge, East Midlands, London, Oxford, Solent

d. Wales & Western England – Birmingham, Bristol, Devon, Wales

Figure 151-3. URNU Locations

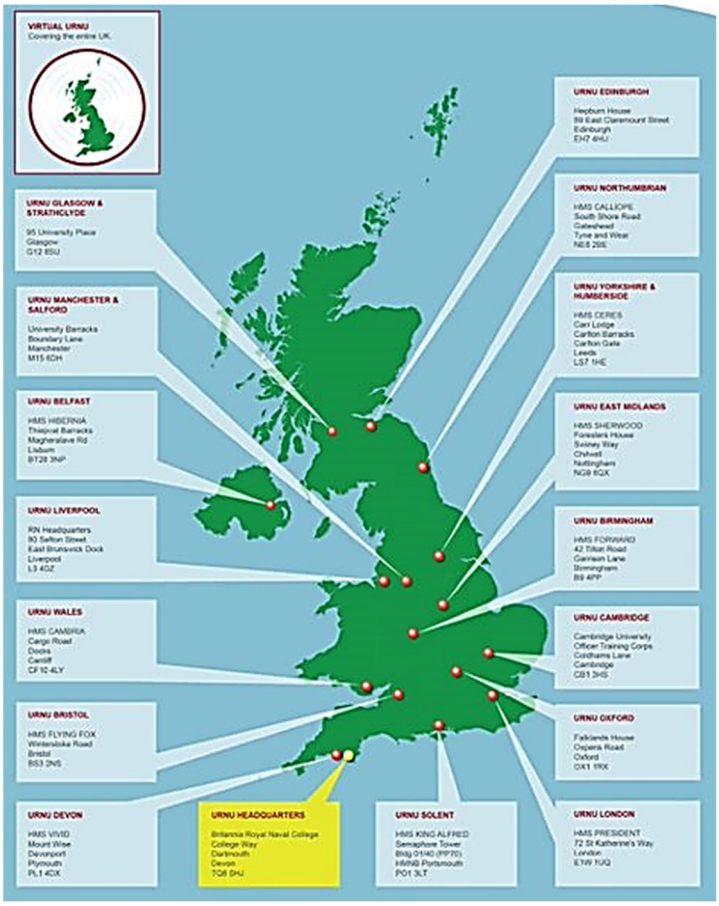

15117. Regional Chiefs of Staff

Each region is administered by one of the OiCs of an URNU within the region, normally this is the longest standing OiC in the region, they are referred to as Regional Chief of Staff (RCoS). The RCoS is responsible to Cdr U and CoS URNU for the administration and delivery of activity within the region, providing regional support to whole URNU events and maintaining liaison between the URNUs within the region and the NRC. The RCoS must maintain two-way communications between URNU HQ and the URNUs within their region, collating and submitting the monthly Personnel, Equipment, Training and Sustainability (PETS) return to URNU HQ.

SECTION 5

UNIT MANAGEMENT

15118. Unit Structure

Each unit has two permanent staff, a regular serving OF2 or OF3 and an FTRS(FC) OR7 who administer and direct the routine operations of the unit. Each unit is funded for a maximum of 59 volunteers (students and TOs), normally made up of 51 students and four TOs, units may have up to eight TOs with approval from URNU HQ. TOs are recruited to deliver instruction and training to students and affiliated personnel across the URNU. There may also be several affiliated sponsored personnel who are administered by the SU Office.

Figure 151-4. URNU Locations

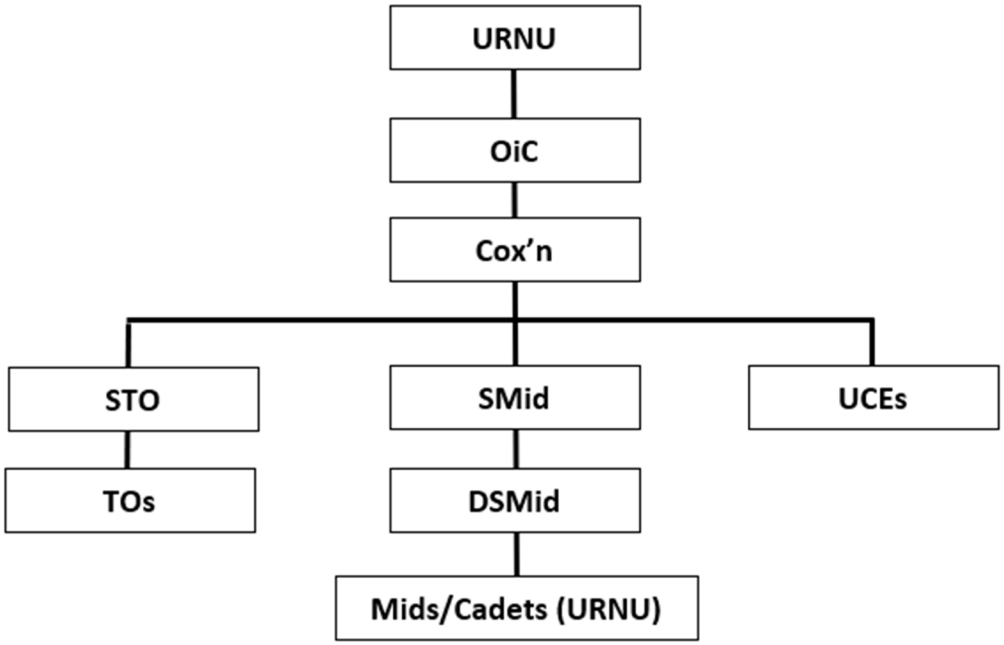

15119. Officer-in-Charge

The OiC is responsible to Cdr U and Capt BRNC for the leadership, management and routine operation of the unit. They have authority over all volunteers (students and TOs) of their unit and functional authority over all RNR List 7 personnel in the course of their duties or as the Duty OiC for an exercise or evolution. They are the 1RO and Divisional Officer (DO) for the Cox'n and 2RO for all TOs in the unit.

15120. Coxswain (Second-in-Charge)

The Cox'n is responsible to the OiC for the Executive function and internal management of the unit. They have authority over all volunteers (students and TOs) of their URNU and functional authority over all RNR List 7 personnel in the course of their duties or as Directing Staff for an exercise or evolution. They are the 1RO and DO for all TOs in the unit.

15121. Senior Training Officer

The Senior Training Officer (STO) is an experienced TO who will normally have achieved promotion to the honorary rank of Lieutenant (University Royal Naval Unit) (Lt (URNU)). The position is routinely advertised when vacant, with any suitably qualified TO being able to apply for the position. The STO is responsible to the OiC to plan the annual training programme and coordinate training delivery within the unit, the STO will also continue to deliver training. They have functional authority over all volunteers (students and TOs) in the course of their duties. They will be interviewed by a board of the OiC, Cox'n and a member of URNU HQ staff.

15122. Senior Midshipman

The Senior Midshipman (SMid) or Senior Second Lieutenant (SSLt) is the senior student, they must have achieved promotion to the honorary rank of Midshipman (University Royal Naval Unit) (Mid (URNU)) or Second Lieutenant (University Royal Naval Unit) (2Lt (URNU). They are responsible to the OiC and Cox'n for the leadership and good order of the students in the unit, acting as the conduit between the students and the permanent staff and TOs. They have functional authority over all students in the unit, in the course of their duties. The SMid/SSLt will be selected annually by the OiC, advised by the Cox'n and STO.

15123. Deputy Senior Midshipman

The Deputy Senior Midshipman (DSMid) or Deputy Senior Second Lieutenant (DSSLt) is the deputy to the senior student, they must have achieved promotion to the honorary rank of Mid (URNU) or 2Lt (URNU). They are responsible to the OiC and Cox'n for supporting the SMid/SSLt in their duties and deputising for them as required. They have functional authority over all students of the unit, excluding the SMid/SSLt, in the course of their duties. The DSMid/DSSLt will be selected annually by the OiC, advised by the Cox'n and STO.

15124. Gunroom Mess Committee

The Gunroom Mess Committee is a student led organisation, providing the management and direction of the mess and use of its non-public funds. BR 2 and BR 18 contain RN policies on messes and the control of non-public funds.

a. **President.** The President of the Gunroom Mess shall be the student appointed as SMid/SSLt. The DSMid/DSSLt will be the Vice-President and shall act for the president in their absence.

b. **Mess Committee.** Each mess is to be regulated by a Mess Committee comprising the Mess President as Chair and at least three elected mess members, if necessary, committee members can hold multiple committee positions. The Cox'n as mess treasurer is added to the committee in an advisory capacity. The committee will be dissolved annually, normally in the summer academic term, with hustings and elections taking place prior to the academic year ending. If the mess should fail to elect representatives to the committee, the OiC, Cox'n and STO shall replace the elected element of the committee and shall be responsible for the proper management of the mess. The mess committee should comprise the following positions:

(1) President of the Gunroom Mess (Chair)

(2) Vice-President of the Gunroom Mess

(3) Secretary (secondary responsibility of another position)

(4) Adventurous Training & Sports Officer

(5) Bar Officer

(6) Charities Secretary

(7) Enterprises Officer

(8) New Entry Representative

(9) Social Secretary

(10) Mess Treasure (advisory capacity)

c. **Responsibilities**. The internal economy of each mess is to be conducted by the committee, but all irregularities are to be checked by the president or, in their absence, the Cox'n and if necessary are to be reported to the OiC.

15125. Gunroom Mess

The Gunroom Mess operates similarly to a Wardroom in the RN or an Officers' Mess in the RM, with the mess being supported by non-public money subscribed from the mess members. All volunteers (students and TOs) are expected to be mess members, the OiC and Cox'n must not be members of the mess, if they wish to benefit from the mess's facilities and functions, they must subscribe without membership or vote. Due to URNUs being lodger units of other establishments the mess may not have a dedicated bar, will often have no dedicated messing facilities and may have no dedicated compartment or area of the establishment.

15126. Unit Standing Orders

Each OiC may issue Unit Standing Orders covering matters specific to their unit, these orders may outline the facilities the unit has access to as a lodger unit, the unit's relationship with the Head of Establishment or any other matters which are specific to the operation of that unit. Such orders must comply with this chapter of BR 3 and direction disseminated annually from URNU HQ in the form of UTMs until inclusion in the URNU Chapter of BRNC SGOs

15127. Weekly Orders

The permanent staff of each unit must produce a set of Weekly Orders. These should be similar to Daily Orders produced for a ship or establishment, covering each seven-day period during the term time of the local universities', orders need not be produced during leave periods. These orders should provide details of all evolutions administered by or involving unit personnel, detailing duty personnel for the weekly Training Night or other activities and list notes of pertinent information to support the executive management and direction of the unit. Each evolution should be listed with timings, location (including attendees if needed) and the person responsible for the evolution. Weekly Orders should be supported with a Shortcast, Midcast and Longcast for the unit.

15128. Training Night Routine

Units should aim to run a minimum of eight Training Nights per academic term, with scope for additional evenings dependent on the length of the local universities' academic terms. Unit should aim to run two weekends of training a month, where possible. An outline of the routine for a Training Night is below.

a. 1230 – Permanent Staff turn-to

b. 1830 – Unit set up complete, Duty Watch muster

c. 1845 – Divisions (inspection, training Colours if practicable)

d. 1900-1930 – Command Update Brief (CUB) and Shareholders

(1) CUB is for unit and military updates (e.g. meteorology, military/civil news, Shortcast, SMid/DSMid, TO/STO and OiC/Cox'n updates)

(2) Shareholders is for Mess Committee updates

e. 1930-2015 – First lesson

f. 2015-2100 – Second lesson

g. 2100 – Bar opened

h. 2230 – Last orders

i. 2300 – Bar closed

j. NLT2330 – All personnel clear of the unit

15129. Regional Support Units

There are four Regional Support Units (RSUs) across the UK, aligned and collocated with the four NRC Headquarters. The RSUs provide support to the RNR, RMR and URNUs. The RSUs will provide support to URNUs in three areas; Personnel Administration, Supply Chain (Naval Stores) support and Assurance (see para 15132). Detailed guidance on RSU support will be released in a Commander Maritime Reserves (CMR) Administration Instruction. Additional support from the RSUs can be requested by Cdr U from CMR SO1 Policy.

15130. Assurance

Unit level assurance is provided internally by the Cox'n and OiC (see para 15131), externally by the RSUs (see para 15129 and para 15132) and by an annual assurance inspection by URNU HQ staff. The assurance inspection will be an in-person inspection of the unit conducted over a one or two day period. A UTM detailing the routine for an assurance inspection will be issued annually by CoS URNU on behalf of Cdr U.

15131. Periodic Books

A list of mandated unit level period books, including the periodicity of inspection and review will be published annually in a UTM. This UTM will also provide guidance on compilation of these books and standard formatting.

15132. Compliance Management Tool

The Compliance Management Tool (CMT) is used to provide unit level assurance of the logistics function. Individual units are responsible for their Tier 1 and Tier 2 checking, as they understand the composition of their own units and the information is easily to hand. RSU OiCs are to provide support and oversight to individual units in their region. RSU OiCs will meet with individual units OiCs termly to provide an assurance check, record findings and make recommendations. The external assurance compliance check undertaken by the Tier 3 authority, will ensure that URNUs are Compliant based on the RSU OiC's termly assurance check.

a. CMT Tier 1 – Unit Cox'n

b. CMT Tier 2 – Unit CO

c. Termly assurance check – RSU OiC

d. CMT Tier 3 (Annual RSU Fleet Logistics Inspection) – Commander Logistics Naval Aviation, RNAS Yeovilton

15133. Warnings & Administrative Process

Volunteers (students and TOs), except for when embarked in one of His Majesty's Ships, are not subject to the Armed Forces Act 2006 (AFA 06) due to being civilian volunteers and not service personnel. Although not subject to AFA 06 all URNU volunteers should endeavour to comply with the Act and RN policies on values, professional standards and the code of conduct, as far as possible. The URNU does have a warnings and administrative process which applies to all volunteers in the URNU, BR 3(1) Ch 21 guides this process.

a. URNU HQ is to be informed immediately of any incidents likely to result in a complaint, media or general public interest.

b. If a volunteer has committed or been involved in a criminal offence the OiC must be made aware at the earliest opportunity. They must notify URNU HQ as soon as practicable and together decide on the need for Service Police involvement.

c. In cases of minor misconduct, the OiC of the unit has the discretion to use administrative action to rectify the behaviour of an individual. This is achieved via the warning system, however if as a result of serious misconduct, it is considered inappropriate for the volunteer to continue to be associated with the URNU then the OiC of the unit must seek advice from URNU HQ at the earliest opportunity.

d. There are three tiers of warning; Tier One is delivered by the Cox'n, Tier Two is delivered by the OiC and Tier Three is delivered by Cdr U. The warnings system is not progressive, and a volunteer may be placed on the tier of warning commensurate with their failing. Normally a volunteer will be placed on a Tier Three warning prior to termination of their membership of the URNU. Warnings must include areas for improvement written as SMART objectives. Standard warning proformas may be obtained from URNU HQ.

e. **Professional Warnings.** Students do not currently undertake any formal courses or exams and due to the URNU syllabus not currently necessitating an assessment, are not liable to receive professional warnings. Professional warnings are applicable for TOs should they fail to complete a mandated course iaw the URNU chapter of BRNC SGOs. The aim of a professional warning is to:

(1) Identify subjects who are training risks so that they can be appropriately supported.

(2) Provide guidance to those who have failed professionally.

(3) Ensure that, should a subject reach a Tier Three professional warning and continue to fail professionally, the consequences are understood.

f. **Character and Leadership Warnings.** All volunteers can be placed on Character and Leadership (C&L) warnings. The following list is not exhaustive but demonstrates shortfalls that should incur the issue of a C&L warning.

(1) Wilful disobedience.

(2) Failure to follow a lawful order.

(3) Behaviour bringing the URNU, RN or RM into disrepute.

(4) Poor behaviour due to alcohol consumption or another factor.

(5) Being late or adrift from place of duty.

(6) Failure to comply with the Code of Conduct or upload the RN's Values and Standards.

(7) Poor kit presentation and turn-out.

g. **Record of Warnings.** Warnings, reviews and the removal from warnings are to be retained in a subject's Personal-File (P-File) for reference during their time in the URNU. They are to be retained on an appropriate digital system (e.g. SharePoint).

h. **Review.** For all warnings, a review date will be agreed depending on the shortfall and the period deemed fit for rectification of the shortfall.

i. **Consequences.** The following sanctions are to be considered when issuing a warning, this list is not exhaustive; the termination of the individual's membership of the URNU is the ultimate sanction that can be authorised by Cdr U.

(1) Alcohol ban in unit bar and at unit formal events.

(2) Exclusion from attending external activity, including sea training, until shortfalls are rectified.

(3) Additional duties in the unit, in order to demonstrate that the shortfall can be rectified.

(4) Deliver extra briefs to the Unit, usually related to the shortcoming detailed in the warning.

(5) Provide reasons in writing to self-analyse poor behaviours.

(6) Removal from Gunroom Mess Committee position.

(7) Removal from unit position of authority (e.g. STO, SMid/DSMid).

j. **Removal from Warning.** If the subject has met the required standard as specified in their warning proforma SMART objectives, then the appropriate Reviewing Officer may remove the subject from their warning by means of a formal letter.

15134. Welfare Support

Due to the constrains of the RN's welfare system regarding the URNU and the limited welfare training that the permanent staff and TOs receive they cannot provide any formal welfare support to the students, other than initially listening to their concerns. Students should be directed to the appropriate welfare services offered by the university they are studying at or the National Health Service (NHS). If the welfare issue stems from the individual's membership of the URNU the issue should be raised through the Chain-of-Command to URNU HQ and Cdr U if appropriate.

15135. Military Education Committee

The War Office established University Officers Training Corps (UOTC) as part of the Haldane Reforms of 1908, it was agreed that any university wishing to furnish an OTC must have a Committee of Military Education appointed by that university.

a. Military Education Committees (MECs) or committees with comparable functions but different names have extended their remit to include the oversight of the USUs of all three Services within their universities.

b. In September 1919, 'The Central Organisation of Military Education Committees of the Universities of the United Kingdom' was established following a conference of representatives drawn from the MECs. This organisation exists today as the Council of Military Education Committees (COMEC). The function of COMEC is to serve as a single point of contact to represent the views of MECs to the MoD and as a channel of information between the universities and the MoD.

c. Unit OiCs must maintain good communications with their fellow USUs and their local MEC. Generally, MECs will hold a termly meeting with representatives from the three USUs and academics who represent the various institutions which make up the specific MEC.

15136. Reserve Forces & Cadets Association

Reserve Forces and Cadets Associations (RFCAs) are Crown bodies in the UK which give advice and assistance to the Defence Council and the Armed Forces, on matters that concern reserves and cadets.

a. They are contracted by the MoD to provide services including management of the volunteer estate, employer support, cadets and youth and to establish and maintain links with the civilian community.

b. Established in 1908 (County Associations), they are today organised as 13 regional associations, comprising voluntary members and a small full-time secretariat.

c. Their governing body is the RFCA Council which coordinates their budgets and policies and is composed of the thirteen voluntary regional chairs. It has a professional chief executive for the council and there is one for each of the 13 regional RFCAs.

d. Unit OiCs must maintain good communications with their local RFCA. RFCAs will hold several meetings annually, one of which will be their AGM with representatives from the reserve forces, USUs, cadets and Armed Forces Covenant signatories.

15137. Affiliated Organisations

URNUs should look to maintain strong affiliations and provide support to a wide variety of organisation; civic, civilian, military, academic, charitable and youth. At minimum a unit should look to have formal affiliations: with the universities which make up the local MEC, the local Maritime Society & Sea Cadets; a Surface Ship, a Submarine and a Naval Air Squadron; the local UOTC and UAS; the local Ceremonial and Civic Mayors; local charities; and a Worshipful Company of the City of London or an Honourable Company of the City of Glasgow. All formal affiliations should be scoped by the OiC and Cox’n and formalised in a Letter of Affiliation (LoA) or MoU. URNU HQ can provide advice on affiliations, with requests to sign a LoA or enter an MoU being submitted to CoS URNU for approval by Cdr U.

SECTION 6

VOLUNTEERS (STUDENTS & TRAINING OFFICERS)

15138. Recruitment

Cdr U is responsible to Capt BRNC and Dir P&T for the management of the recruitment of volunteers into the URNU, with policy being disseminated from URNU HQ and aligned with regular and reserve recruitment for the RN and RNR (see BRd 3(1) Pt 4 and BRd 3(2) Ch 2). Specific guidance on volunteer (student and TO) recruitment, including timelines, will be disseminated annually from URNU HQ in the form of a UTM until inclusion in the URNU Chapter of BRNC SGOs.

a. **Students.** The main annual recruiting drive for students takes place during the universities' Freshers' Weeks in the autumn. Most universities hold re-freshers' events in the early new year and units with spaces are to consider this as means of achieving full strength. Through year expressions of interest and commencement of the recruitment process is permitted.

b. **Training Officers (TOs).** Recruitment of TOs is conducted throughout the year, units with available positions for TOs will advertises these, in consultation with URNU HQ, normally regionally and occasionally nationally. Through year expressions of interest will be considered by units if they have available TO positions.

15139. Entry Requirements

Due to the unique nature of the URNU there are specific entry requirements for volunteers, these are detailed below.

a. **Pass URNU Selection Board.** All volunteers must pass a selection board convened either locally, regionally or nationally as appropriate (see para 15140).

b. **Meet Nationality and Residency Requirements.** Current Service policy on the recruitment of foreign and Commonwealth citizens or subjects applies. Additionally, residency conditions must be met by all applicants including British Nationals.

c. **Medical Entry Standard.** Entry Medical must be conducted in accordance with current recruitment policy (see Sctn 8).

d. **Be at Least 18 Years of Age.** Individuals under 18 years of age are not eligible for URNU membership.

e. **Pass the Military Swimming Test.** A Military Swimming Test (MST) should ideally be conducted during New Entry Weekend. If a volunteers fail the MST the units must organise a resit, volunteers will have three attempts to pass the MST prior to termination of their membership of the URNU. All MST must be witnessed by a qualified and in-date Physical Training Instructor (PTI). Evidence must be provided to say when, where and by whom the MST was conducted when passed and must be recorded in the volunteer's P-File. Volunteers who have not passed the MST may not engage in waterborne activity as part of the URNU.

15140. Selection Boards

All selection boards should be a face-to-face interview within the unit; a question bank and interview guidance will disseminated out annually as a UTM from URNU HQ. The composition of selection boards is detailed below.

a. Selection boards for students are convened locally by the OiC of the unit, the selection board consists of; an OiC (Chair), a Cox'n and third member (STO, TO, UCE or in extremis a university academic or the SMid/SSLt).

b. Selection boards for TOs are convened by URNU HQ at the request of the OiC of the unit the TO is looking to join, the selection board consist of; USC (Chair) as the TO Career Manager, an OiC and CoS URNU (or a second OiC). The following is a list of individuals often recruited as TOs:

(1) Ex-Service Personnel

(2) Merchant Navy Officers (current or former serving)

(3) Ex-Mid (URNU) normally only considered after a minimum of 12 months post-student membership.

(4) Civilians with appropriate qualities, teaching skills, motivation and knowledge. These may include, but are not restricted to, individuals already known to local AFCOs but not recruited into the regular Service.

15141. Administration

All volunteers are administered by their unit's permanent staff and associated RAO, in-line with standing Service policy. Direction and guidance on the unique administration of volunteers is available from URNU HQ.

a. **Remuneration of RNR List 7 (URNU) Personnel.**

(1) The procedures for payment of RNR List 7 (URNU) personnel are listed in JSP 754 (Tri-Service Regulations for Remuneration and Charges) and JSP 752 (Tri-Service Regulations for Allowances).

(2) Strict control is to be exercised over expenditure associated with training days. The annual maximum allocation is to be regarded as a ceiling figure, neither a base line nor an entitlement.

(3) Volunteers are entitled to payment of travelling expenses in accordance with JSP 752.

(4) Volunteers may be paid a quarter of one day's remuneration for every drill night attended.

(5) Payment of volunteers will be via JPA and in accordance with rates promulgated annually by directed letter and the Armed Forces Remuneration Review Body. Students will join the remuneration table at OF Pre-Career where they will remain until they graduate.

(6) Volunteers may be paid up to the maximum training day allowance as promulgated by BRNC.

(7) Payment is monthly, in arrears, by BACS to nominated banks.

b. **Bounty.**

(1) JSP 754 Pt 2 03.0517 and 03.0530 refer.

(2) The annual minimum training commitment to qualify for the payment of bounty is 24 days for volunteers. Training is ideally to include 16 drill nights and at least one training weekend per term. Training records are to be maintained locally and recording of bounty authorisation is to be iaw extant Maritime Reserve (MR) regulations.

(3) There will be some activities not directly associated with formal training for which the permanent staff may authorise payment, but these will not necessarily count towards the qualification for bounty.

(4) Volunteers may be eligible for payment of bounty on fulfilment of the RNR List 7 training commitment. Notwithstanding the non-alignment of financial and academic years, the bounty for students is to be paid on successful completion of the academic year. Payment will be reflected in September remuneration statements. Payment for TOs' bounty will align with the financial year. Payment of proportional amounts of bounty earned during financial years is not authorised.

c. **Travel and Subsistence.**

(1) Travel and Subsistence will be approved for volunteers and booked by permanent staff. Service: accommodation, catering and, where available, transport should always be used where possible.

(2) Reserve personnel of other lists providing instructional and administrative assistance to URNUs may be authorised to count that time as Support Activity. All assistance is to be reported to the parent unit, which will action the appropriate pay input to JPA.

d. **Reporting Procedures.**

(1) Annual reports will be completed on the occasions required by current regulations at BRd 3(1) Ch 57.

(2) **Training Officer Reports.** Reports on TOs are to be completed on 31 May annually and on recommendation for promotion using the NSAR format. Additional reports are required on change of unit OiC and termination of membership, unless an annual report has been submitted within the preceding six months. Promotion recommendations are to be submitted to Cdr U with copies retained within the unit. The URNU HQ will maintain a database of all volunteers.

15142. Career

The specific career structure of volunteers (students and TOs) will be published by URNU HQ in a UTM and will be incorporated into the URNU Chapter of BRNC SGOs. The USC is the career manager for all TOs and is the point of contact for all TO career enquires.

a. In general students are recruited into the URNU for a three-year programme of training, fourth year membership may be awarded, with applications made to URNU HQ at least three months prior to the end of the academic year.

b. After successful completion of their probation period, normally six months to one year, TOs will initially volunteer with the URNU for five years at a time, with applications for extension made to URNU HQ at least six months prior to the end of the TO's initial volunteering period.

(1) Normal retirement age for TOs is 55 years, however annual extensions of service may be made up to the age of 60 or above at the discretion of Cdr U. In addition to being noted in annual reports, recommendations for extension of volunteering, for those on annual renewal, are to be submitted in writing by OiC to Cdr U no later than three months before a TO's current termination of membership date.

(2) A TO's termination of membership, including resignation and retirement, are to be supported by letter to Cdr U, via CoS URNU.

15143. Training

The training syllabuses and course content will be published by URNU HQ in a UTM and will be incorporated into the URNU Chapter of BRNC SGOs.

a. The annual maximum number of training days for volunteers (students and TOs) is subject to annual review. The TOs' annual allowance commences on 1 April whereas the students' commences on 1 September.

b. URNU HQ will direct the composition of the training syllabus for volunteers, both students and TOs, this will include detail of initial and career courses and promotion points for volunteers.

15144. Promotion

On successful completion of the recruitment process, including medical and selection board volunteers will be entered onto RNR List 7 holding honorary rank. Students will be accorded the dignity of being addressed as Mr/Ms *'Surname'*. TOs will be addressed in the same manner as Commissioned Officers of the equivalent rank, non-commissioned service personnel may address TOs as Mr/Ms *'Surname'* as they do not hold a Commission.

a. On entry to the URNU students will be referred to as New Entrants, holding the honorary rank of Cadet (URNU) (Cdt (URNU)) until they have completed the recruitment process and mandated training, including the new entry training syllabus for students. On completion of this training students will be referred to as Cdt (URNU). Students may promote to the honorary rank of Midshipman (URNU) (Mid (URNU)) once they have completed the training syllabus for students as directed by URNU HQ.

b. On entry to the URNU TOs will be referred to as Probationary TOs, holding the honorary rank of Acting Sub-Lieutenant (URNU) (A S/Lt (URNU)) until they have completed the mandated training, including the initial training course for TOs. On completion of this training, they will be confirmed in the honorary rank of Sub-Lieutenant (URNU) (S/Lt (URNU)) and will have the opportunity to promote to the honorary rank of Lieutenant (URNU) (Lt (URNU)) on completion of the career course for TOs. There is no promotion above Lt (URNU) for volunteers in the URNU, rank and seniority on entry to the URNU may take into account former service.

15145. Accelerated Officers Programme

Where a student member of an URNU applies to join the RNR Accelerated Officer Programme (AOP) they will, on successful completion of the Admiralty Interview Board (AIB)., join the RNR in the rank of substantive rank of Officer Cadet (OCdt) on List 1. They will be administered and paid by their RNR Unit but be seconded back, in their RNR rank, to their former URNU until the completion of their university studies with no obligation to attend their RNR Unit. Upon award of the URNU CoE, they will have been deemed to have achieved the requirements for Bounty at the List 1A rate. On completion of their studies their secondment to the URNU will end and they will fulfil their reserve commitment with their RNR unit.

15146. Service Entry

a. URNU members are to be advised of the opportunities available for service with the RN/RM or RNR/RMR and assisted with applications and preparation for the AIB. Permanent staff are to ensure all students are aware of the career opportunities available to them in the RNR during their time at university or after they leave the URNU. This will require liaison with the RNR/RMR unit COs to ensure the best route for entry is for the individual concerned.

b. **Annual Report of Recruiting**

(1) A report of recruiting activity of each unit to the regular or reserve service is to be maintained by CoS URNU on behalf of Cdr U and submitted as required in response to questions from external authorities.

(2) Each unit is to maintain a record of AIB applications and results. Such statistics should be included in reports to URNU HQ.

15147. Leaving

On leaving the URNU, either due to the end of their volunteering period or for any other reason, the volunteer will have their membership of the URNU terminated. If entering regular or reserve service, the volunteer's administrative details will be passed to their new unit via their URNU's permanent staff to ensure a smooth transition from volunteer to service person. If not entering regular or reserve service, the volunteer will remain a member of the URNU, administratively only, until such time as all payments, including bounty or back pay, have been completed (normally the end of September annually). Details relating to termination of membership due to misconduct is below.

a. If terminate the membership is required as a result of serious misconduct, or where it is considered that it would be inappropriate for the student to continue to be associated with the URNU organisation, the prior approval of Cdr U is to be sought. Cdr U is to inform Capt BRNC of the circumstances surrounding any resignation or termination of membership through misconduct. Cdr U's guidance is to be sought where necessary or in circumstances which are likely to result in complaint or media or general public interest. Where acceptance of resignation is deemed unsuitable and formal terminate of membership is appropriate, Cdr U is to make formal application to Capt BRNC. The OiC has no authority to terminate the membership of a volunteer except after prior approval via this route or on graduation.

b. On termination of membership an appropriate entry under the 'End Employment' field should be made on JPA. Form C437 is to be rendered to SPVA and copied to Cdr U. MOD Form 135 (Official Secrets Act and Confidentiality Declaration) is also to be completed and held at the unit and the RN ID (MoD Form 90) card returned.

SECTION 7

SPONSORED UNDERGRADUATES

15148. Sponsored Undergraduate Office

The SU sub-department is administered by the SU Office based at BRNC. The sub-department is led by the Sponsored Undergraduate Staff Officer (SUSO) supported by the Deputy Sponsored Undergraduate Staff Officer (DSUSO), the two Drummond Division Staff Officers (DDSO North and DDSO South), the Jolly Division Staff Officer (JDSO) and two civil servant administrators. The SU sub-department administers the RN's degree schemes including Medical Cadetships, UCE, RN DSUS, in service degree schemes, scholarships and legacy bursaries

15149. Drummond Division

Drummond Division administers the personnel on the RN's various sponsored engineering degree schemes (i.e. RN DSUS, UCEs). The division is led by the DDSO North and DDSO South who are responsible to the SUSO and DSUSO for the provision of divisional care and administration of the sponsored personnel divided across the UK, the division is divided North and South. RN DSUS personnel are uniformed civilians held on RNR List 7 for administration purposes only, with a similar status to that of URNU volunteers. All other Drummond Division personnel are normally post-Phase 1 service personnel on the untrained strength of the RN.

15150. Jolly Division

Jolly Division administers the personnel on the RN's medical cadetships. The division is led by the JDSO who is responsible to the SUSO and DSUSO for the provision of divisional care and administration of personnel on medical cadetships. Personnel on medical cadetships are classed as pre-Phase 1 service personnel on the untrained strength of the RN, they are Appointed Officers holding no Commission, in the substantive rank of Surgeon Sub-Lieutenant (Surg S/Lt) or Surgeon Sub-Lieutenant (Dental) (Surg S/Lt (D)).

15151. University Cadet Entry

Those on the UCE scheme complete Initial Naval Training (Officer) (INT(O)) before attending university and are Commissioned Officers who are substantive Midshipmen. They are regular service personnel who are on the untrained strength of the RN.

15152. Affiliation of Sponsored Personnel

All Sponsored Undergraduates (SUs) will be affiliated to the URNU which is geographically closest to the university they are studying at. Each category of SUs has a directed minimum attendance at the URNU to which they are affiliated.

a. UCEs are expected to attend all training nights, supporting the permanent staff in minor unit management and training delivery, as would be expected of any officers on the untrained strength in regular service.

b. DSUS students are funded for 45 RSDs remuneration, 20 of which are specifically put aside for training with the URNU. Should a DSUS student need to exceed the 20 RSDs allotted for training with the URNU the permanent staff of the unit to which they are affiliated must consult the SU Office for approval.

c. All SUs remain under the authority of the SU Office whilst away from BRNC, day-to-day management and functional authority for SUs is delegated to the units' permanent staff, particularly in URNU related matters. All matters relating to divisional care and administration for SUs should be directed to the SU Office for consultation and approval.

SECTION 8

MEDICAL ADMINISTRATION

15153. Introduction

All applicants to join the URNU (student or TO) must complete a full medical, as soon as practicable after successful interviewing. As of 1 October 2024, the medical process for the URNU is contracted under the New Recruitment Process (NRP) which is aligned with Recruitment and Attract (R&A) for the RN. URNU medicals will be processed at one of the three Candidate Preparation Centres (CPC). URNU applicants are assessed using the pre-entry standards laid out in JSP 950 Leaflet 6-7-7 and will be awarded a Joint Medical Employability Standard (JMES).

15154. Review

Unit permanent staff will administer and review the medical progression of applicants using RITS. This must include the date the applicant registers with RITS, creation of Pathfinder and all other significant information including appeal dates, delays or other administrative issues. Permanent staff will chase up applicants who have outstanding actions for the medical process. If an applicant does not complete all actions, without mitigation, relating to the medical process and RITS within one month of starting the process their recruitment into the URNU will be terminated. Any pertinent information causing a delay to the medical process should be reported to URNU HQ at the earliest opportunity. Feedback on the medical process to URNU HQ is vital for the continued improvement of the medical process for those joining the URNU.

15155. Caldicott Principles

The Updated Service Entry Medical Cell (SEMC) process has been created to remove any need for permanent staff to see and/or process medical information, thereby protecting the medical confidentiality of those joining the URNU. At no point should an applicant be asked to provide medical information to permanent staff, however they may provide information of their own volition. The Caldicott Principles (JSP 950, Vol 1, Ch2) must be read and signed by all permanent staff (including civil servants) on taking up an assignment or a job within the Universities Department or the URNUs. These principles safeguard the individual making a medical discourse and the member of permanent staff to whom it is disclosed.

15156. Initial Application

Creation of the RITS and Pathfinder accounts must be completed by the applicant themselves, permanent staff must not create accounts for or upload the information of applicant to RITS or Pathfinder.

The initial application process is listed below:

a. Permanent staff to e-mail out a RITS link to the applicant to create a RITS logon and subsequent Pathfinder account.

b. A Unique Reference Number (URN) is generated when the RITS account is created, the applicant and permanent staff should use this number in all future optical and medical correspondence.

c. Permanent staff will issue the applicant with a Royal Navy Medical Questionnaire (RNMQ), an eye test voucher and consent form via RITS, briefing them on the administrative process and expected timeline of the medical process.

d. Permanent staff must ensure that the applicant adhere to the URNU Pre-JMES Risk Matrix (Annex 151B) until they have attending CPC, completed the medical process and been awarded a JMES which meets the minimum standard required for membership of the URNU.

e. Any applicant who is awarded Medical-on-Hold (MoH) or Permanently Medically Unfit (PMU) status at CPC does not attend the URNU or engage in URNU activity until the medical process has been completed and the MoH resolved or PMU status successfully appealed and an appropriate JMES awarded. Should a suitable JMES not be awarded the applicant will have their applicant to join the URNU terminated.

f. Permanent staff must ensure that applicants regularly check RITS, comply with actions, requests and tasks. Permanent staff are to record and update the status of applicants as a competency on the University Administration System (UAS) or replacement system, using the below categories.

(1) Medical – Fit.

(2) Medical – TMU/Medical-on-Hold.

(3) Medical – PMU.

(4) Medical – Appeal.

(5) Medical – Submitted (RTIS account created).

(6) Medical – None.

g. All applicants must be made aware of the need to inform Command of any change in medical circumstance and sign a Notification to Command on the Change of Medical Circumstances (Annex 151C) as required.

h. A full RITS user guide has been produced to aid applicants and permanent staff through the administrative process of RITS and the CPC process to achieve a medical. A copy of this user guide can be obtained from URNU HQ.

i. An URNU Recruitment Medical Flowchart can be found at Annex D.

15157. Medical Categories

On completion of a face-to-face medical at CPC the applicant will receive an e-mailed clinical letter informing them of the result of their medical, this should be retained by the individual and should not be uploaded onto UAS or any other RN digital system. The outcome of an applicant's medical at CPC will be recorded on the applicant's RITS account and JPA if a JMES is awarded.

a. A JMES is an alphanumeric code reflecting an individual's fitness to be employed in the Air (A), Land (L) and Maritime (M) environments together with any additional specific Environment and Medical Support (E) considerations, Medical Limitations (MedLim)may also apply. Below is an example of how a JMES with MedLim will appear on JPA (MedLim 1206 – Unfit to work in confined spaces).

Date of Award	Date of Review	Permanency	MDS	MES	MedLim
10 Aug 16	10 Feb 17	TEMP	MLD	A4 L3 M4 E3	1206

b. The minimum JMES for volunteers is MLD A4|L4|M3|E4 for students and MND A4|L4|M2|E4 for TOs.

c. There are three outcomes from an applicant's medical at CPC these are listed below:

(1) **Pass/Fit.** Also known as Medically Fully Deployable (MFD). The applicant has met the standards set for both Regular and Reserve member of the RN. The Applicant can partake in all URNU activity, providing all other recruitment requirements are met. A JMES will be awarded and uploaded to JPA.

(2) **Medical-on-Hold (MoH).** This is a temporary holding category where the medical process has not been completed and further information is required either from the applicant or a medical specialist. No JMES is awarded.

(3) **Permanently Medically Unfit (PMU).** The applicant has not met the standard required to engage in URNU activity and is therefore unable to be a member of the URNU. Their application process will be terminated and no JMES will be awarded.

d. Applicants who are made MoH/PMU they are not permitted to attend an URNU or engage in any URNU activity, beyond that which is required to resolve their MoH or appeal the award of PMU.

15158. Appeals

An applicant who is made PMU during their medical may submit an appeal against the award, but only if they can provide additional clinical evidence to support a review of this decision.

a. Permanent staff will initiate the appeal process via RITS. Appeals are to be submitted directly to the SEMC appeals mailbox (NAVY RA-SEMC MAILBOX and NAVY RA-SEMC APPEALS MAILBOX), by a member of the permanent staff and will be reviewed by the Senior Medical Officer Service Entry (SMOSE) and SEMC appeals team.

b. SMOSE, an RN Occupational Health Consultant, has the flexibility to decide on an individual's suitability to volunteer for the URNU. Individuals are encouraged to gather as much medical evidence as possible to prove their case. This may be letters from General Practitioners (GP), specialists and/or consultants as well as prescription scripts or test results. An overarching cover letter is also required. The gathering of information, including any associated costs, is the responsibility of applicant. It is imperative that a thorough and detailed history is provided with appropriate mitigation to ensure an expedient SEMC review.

c. OiCs are encouraged to submit a Letter of Recommendation in support of any appeals, this should be submitted to the SEMC team via the applicant. This letter should primarily be used to shed light on the nature of URNU expectations and the individual's ability to fully participate, comments may be made on likely achievable medical standard and mitigations which might be put in place.

d. Should the appeal against PMU be successful the individual will be awarded a JMES and can fully engage in all URNU activity allowed against their JMES. Should the appeal be unsuccessful the applicant's recruitment process will be terminated, and they will be unable to join the URNU.

15159. Risk Assessment

a. As with any part of the MoD URNUs must hold risk assessments (RAs), generic and specific, which cover all routine and ad hoc activity within the URNU. In conjunction with an RA for each activity volunteers (student and TO) must sign a URNU Activity Participant Declaration Form (Annex 151E).

b. During the recruitment process and prior to the award of a JMES volunteers may undertake URNU activity in accordance with the URNU Pre-JMES Award Risk Matrix (Annex 151B). Applications for volunteers to undertake activities in the "Activity allowed pre-JMES award with Capt BRNC approval" part of this Risk Matrix should apply to URNU HQ for permission stating, the nature of the activity, number of pre-JMES personnel participating, a bespoke RA for the planned activity, medical plan and the personal accident insurance the individuals hold.

15160. Volunteers

Volunteers (students and TOs) will not be subject to repeat medicals throughout their membership in the URNU, as such they must sign the Notification to Command on the Change of Medical Circumstances (Annex 151C). This waiver should then be held in the volunteer's P-File for the remainder of their time with the URNU.

a. If a volunteer develops a medical condition or suffers an accident that temporarily prevents them from taking part in URNU activity, they can be retained with a temporary JMES. This may only be held whilst they recover.

b. A change in medical status will require consultation with SMOSE and is particularly important when upgrading volunteers post recovery from a medical condition or accident. SMOSE may require information from the TO's GP.

c. URNU HQ must be informed if a volunteers medical status changes and subsequently kept appraised of their recovery plan and upgrading of their JMES.

SECTION 9

UNIFORM AND INSIGNIA

15161. University Royal Naval Units Rank Insignia

URNU (RNR List 7) specific rank insignia for volunteers (students and TOs) is currently under review and will be added on approval. As Honorary Officers, all TOs must wear a gold ‘R’ in the executive curl and students must wear rank slides defaced with the letters ‘URNU’ in all orders of dress.

ANNEX 151A

URNU TRAINING CADRE VOLUNTEER AGREEMENT
(AMENDMENT 1 DATED 23 MAY 24)

By signing this agreement, you will, as appropriate, accept, confirm and declare all the matters under this section.

You acknowledge your acceptance of University Royal Naval Units' values, rules and regulations.

This agreement supersedes and replaces any earlier agreement between myself and the MOD about my volunteering with the University Royal Naval Units' Training Cadre. By signing this agreement, I confirm that:

1. I accept that I am being enrolled as a volunteer with the URNU as a member of the Training Cadre from a date that will be notified to me by the University Royal Naval Units HQ at Britannia Royal Naval College (BRNC) Dartmouth. In engaging as a volunteer, I acknowledge that I am not a member of the Regular or Reserve Forces.

2. I acknowledge that my acceptance as a volunteer in the URNU is subject to my being awarded a full Security Clearance (SC) by UK Security Vetting, and my being awarded an assessment of at least Fit (URNU) with caveats by the RN's Senior Medical Officer Service Entry (SMOSE) following a pre-joining medical. I acknowledge that I may be taken into the organisation on risk prior to these being awarded and acknowledge that a failure to achieve both SC and the medical will lead to immediate termination of my membership and voiding of this volunteer agreement.

3. I understand and accept that the University Royal Naval Units are established to broaden naval understanding and develop students and that they follow the customs and ethos of the Royal Navy.

4. I agree to uphold the ethos, core values and standards, and code of conduct of the URNU and the Royal Navy as currently published or amended in the future.

5. I agree not to promote any beliefs, behaviours or practices that are not compatible with the core values and standards of the URNU or the Royal Navy.

6. I agree to comply with the policies, rules and regulations of the URNU and voluntarily undertake to comply with any lawful instruction given to me. Though I recognise that I am not subject to the Armed Forces Act (AFA) 2006, unless at sea in one of His Majesty's Ships, I will conduct myself in accordance with the provisions of the AFA at all times when volunteering.

7. I understand that if my conduct falls below and acceptable standard this volunteer agreement may be cancelled and my membership of the URNU Training Cadre terminated following an investigation by the URNU organisation. Lesser infractions may result on my being placed under warning for my character and leadership as specified in BRNC's University Department Standing Orders (UDSOs) Part 1.

8. I will complete the on-line learning course: Basic Care of Trainees (BCOT) within one month of signing this agreement providing me with basic guidance on the provision of Welfare and Duty of Care of vulnerable adults.

9. I accept and understand that it is the primary responsibility of ALL adults involved with the URNU to safeguard the moral, psychological and physical welfare of Cadets, regardless of their gender, religion, race, ability, disability, sexuality and social background, by protecting them from any form of physical, emotional and sexual abuse or neglect.

10. I will voluntarily undertake, under the direction and guidance of my superiors, to train cadets in accordance with a training programme authorised by the URNU and in accordance with the relevant regulations and instructions. I will also carry out administrative or other duties as detailed and as necessary. I fully understand my responsibilities for the safety and wellbeing of cadets.

11. I agree that for me to offer my services on a voluntary basis, I accept the requirement to undertake the appropriate learning / training within the timescale, as laid down by the URNU. Failure to complete the appropriate initial and continuation training to a satisfactory standard may result in the termination of this agreement.

12. I accept that my continued voluntary service with the URNU is conditional on my satisfactory performance and that I will be given an annual report assessing my performance in the role. In assessing my suitability for continued voluntary service, such factors as health, fitness, enthusiasm, attitude, qualification and competence will be taken into account.

13. I understand that as I am volunteering my services, there is no legal obligation on me to accept any voluntary activities, nor is there any legal obligation on the URNU to provide me with any voluntary activities.

14. In order to maintain currency and experience as a member of the URNU Training Cadre I will seek to complete a minimum of 24 days' volunteering each academic year. The URNU will endeavour to provide me with the opportunity to complete the 24 days and to facilitate times and places of my choosing, although this may not always be possible and alternatives may be offered. Achieving this commitment will entitle me to the award of a Certificate of Efficiency (CofE).

15. I confirm that if I persistently fail to turn up for activities without contacting the URNU in advance this agreement may be terminated in accordance with current or future amendments to the policies, rules and regulations of the URNU.

16. I will return any uniform and equipment loaned to me when my volunteering ends.

17. I agree that if I have any concerns during my volunteering with the URNU, I will report these immediately using the appropriate procedure as laid down in UDSOs Part 1 and other statutory and non-statutory publications.

18. I understand and accept that I am a volunteer offering my services on a voluntary basis which can be terminated by me at any time by notifying the University Royal Naval Unit HQ in writing.

19. I understand and accept that:

a. For those activities that are authorised by the URNU that I undertake voluntarily, I will receive a volunteer allowance[1].

b. I may additionally receive other payments to compensate me for other out-of-pocket expenses but that if I wish to receive such allowances I may need to apply for them personally.

c. The volunteer allowance that I receive will be based on the Main Officer OF-1 and OF-2 Pay Spines with Zero X-Factor[2].

d. I will receive a cash bounty for each year in which I achieve my volunteering commitment.

20. Any allowances or other payments which are approved, will be paid to me by bank account so I will ensure that any changes of bank account are notified to the Regional Support Unit (RSU) that provides N1 / N4 support to the URNU to which I am assigned.

21. I agree that I will inform URNU HQ / RSU when relevant of any significant changes to my personal circumstances that affect my continued suitability for volunteering with the URNU. Examples include issues that may affect my security clearance or my working with vulnerable adults; or an issue, including medical, that may cause an increased risk to myself or others while taking part in volunteer activities. This is to ensure that all those carrying out activities in the URNU can do so in a safe manner and to ensure all activity is suitably risk assessed. I understand that failure to declare any relevant matter in a timely manner may cause an increased risk to myself or others. I also agree to inform URNU HQ / RSU of changes that are important for administrative purposes such as change of name, permanent civilian address and next of kin.

[1] URNU Training Cadre Volunteers are not members of the Armed Forces Pension Scheme, nor eligible for the Armed Forces Compensation Scheme.
[2] The rates for the URNU Volunteer Allowance will be promulgated annually in the Armed Forces Pay Award Directed Letter.

22. I understand that as a member of the URNU Training Cadre I am a temporary officer held on List 7A of the Royal Naval Reserve for administrative purposes only.[3] My rank is therefore honorary[4] and I will not use my honorary rank or wear uniform except for activities approved by my URNU Commanding Officer. Any breach of this undertaking may lead to immediate termination of this volunteer agreement.

23. I understand and accept that I am engaged as a volunteer and that there is no intention on the side of either party that this agreement should create an employment relationship or employee or worker status, either now or at any time in the future.[5]

SIGNATURE:

NAME:

DATE:

[3] BRd 3(2) Para 0108.
[4] Currently a gold 'R' within the executive curl for honorary officers iaw BRd 3(1) Art 3909.
[5] Accordingly the employment rights associated with being an employee or worker (such as, for example, paid annual leave entitlement) do not apply.

ANNEX 151B

UNIVERSITY ROYAL NAVAL UNIT PRE-JMES AWARD RISK MATRIX

1. Activity allowed pre-JMES award

a. Attend a Ministry of Defence (MoD) establishment (University Royal Naval Unit (URNU) or other) for the purposes of completing the recruitment process for the URNU (i.e. medical assessment, Candidate Preparation Centre (CPC), Security Clearance (SC) paperwork, Joint Personnel Administration (JPA) system onboarding, panel interview, uniform measurements and order, site inductions and open days/acquaints).

b. Basic education in kit and uniform care.

c. Participate in local induction training and classroom-based activity or lectures (i.e. non-physical Practical Leadership Tasks (PLTs), URNU briefing, guest speakers, basic mandated training and briefs).

d. Ship and establishment recruiting visits, but only so far as a civilian visitor would be allowed. They cannot be involved in supporting the event, only attending it (e.g. Ship Open to Visitors (SOtV)).

e. The 12-week fitness programme (off-site of a MoD establishment).

N.B. *Duty of Care (DoC) is provided by the URNU in all the examples above and a risk assessment must be completed for each activity.*

2. Activity allowed pre-JMES award with Captain BRNC's approval

a. Engage in locally arranged and low-level Sport and AT or activity that the students could engage with as a private citizen. Provided that it is delivered by a third-party external provider who hold their own insurance and indemnity. Where the provider does not have liability cover the students must prove they hold their own personal accident cover (e.g. canal boating, use of rock-climbing wall, water sports provided external to the MoD).

b. Partake in non-led sport or physical activity (e.g. deck sports in unit, run and refereed by the students themselves).

c. In-land waterways training or in-land waterways Royal Yachting Association (RYA) qualifications provided by the URNU National Training Centre (URNU NTC), specifically at Coldhams Lane, Cambridge.

d. Basic, static foot drill (delivered by a qualified drill instructor).

e. Embarkation in small patrol vessels as passengers only (e.g. for a few hours day running).

N.B. *DoC is provided by the URNU in all the examples above and a risk assessment must be completed for each activity. All activity must be reviewed by URNU Headquarters (HQ) for Capt BRNC's sign-off, this must include a review of the medical/insurance plan, communications plan and a risk assessment.*

3. Activity NOT allowed pre-JMES award

a. Acquaint courses which require hands-on rigour and engagement.

b. Military exercises, both land and maritime.

c. Sleeping in adverse conditions (e.g. in the field, on an expedition, in the wilderness, onboard a military vessel).

d. Department acquaints or low-level work in department onboard a ship or in a military establishment.

e. Royal Navy/Royal Marines (RN/RM) sport, unit sport or inter-University Service Units (USU) sport.

f. Ceremonial events or parades.

g. Representing the RN/RM in the public eye.

h. New Entry weekend or similar residential trips or courses.

i. Undertaking the Pre-Joining Fitness Test (PJFT), RN Fitness Test (RNFT) or RN Physical Employment Standard (RN PES).

j. Partake in BRNC or wider URNU events.

k. Be hosted in military accommodation outside of their parent unit.

l. Embark in a military vessel as a passenger or as Un-Trained Strength (UTS).

N.B. *Permanently Medically Unsuitable (PMU) or Medical-on-Hold (MoH) and legacy Temporarily Medical Unsuitable (TMU) personnel must not attend a unit or engage in any training, until either the award of PMU has been appealed against successfully or the requirements of MoH has been resolved.*

ANNEX 151C

NOTIFICATION TO COMMAND ON THE CHANGE OF MEDICAL CIRCUMSTANCES

I acknowledge I have passed the medical process and been given the medical status of 'Fit' or have been awarded an appropriate JMES for my position as a volunteer (students or Training Officer) within the University Royal Naval Units (URNU). I fully understand my medical and physical limitations with regards to the activities I can carry out with the URNU.

a. I confirm that:

(1) I will inform the permanent staff of my unit, or the URNU, if I suffer a physical injury that may affect my ability to take part in URNU activity.

(2) I will inform the permanent staff of my unit, or the URNU, if there is any change in my medical circumstance.

(3) I will inform the permanent staff of my unit, or the URNU, if I feel that any URNU activity is beyond my physical ability.

b. I acknowledge that:

(1) I am under no obligation to discuss the specifics of a change in medical condition or injury with my unit or URNU permanent staff, but I am obliged to inform them of an injury or change in medical circumstance.

(2) I will be required to disclose the specifics of an injury or change in medical circumstance to the Senior Medical Officer Service Entry (SMOSE) who may require information from my General Practitioner (GP). This may alter my current JMES or medical category.

Surname	
Forename	
Rank	
Service Number	
Declaration	
I fully understand and agree to the comments above and will not take part in URNU activity in contravention of any of the above points.	
Signature	

ANNEX 151D

UNIVERSITY ROYAL NAVAL UNITS RECRUITMENT MEDICAL FLOWCHART

Figure. 151D-1

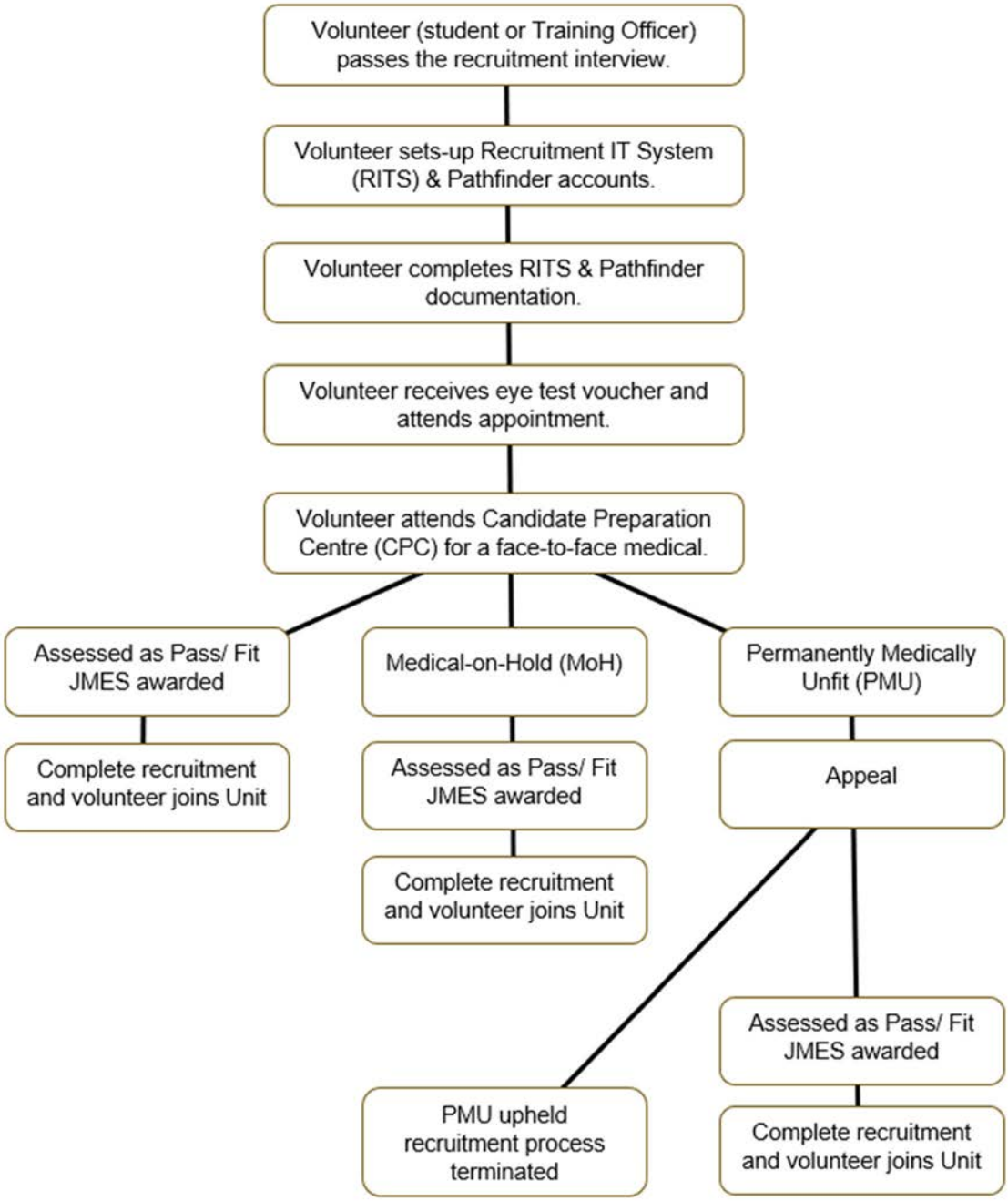

ANNEX 151E

UNIVERSITY ROYAL NAVAL UNIT ACTIVITY PARTICIPANT DECLARATION FORM

I acknowledge that this Form will be used by the University Royal Naval Units (URNUs) for the activity in which I may participate, and that it will govern my actions and responsibilities at said activity.

I understand that participating in this activity described above poses risk of personal injury and by signing this form I knowingly and voluntarily accept that risk. I understand that this activity requires physical conditioning, and I certify that I am in appropriate physical condition for this activity.

I will inform the staff organising the activity if there are any changes to my health or wellbeing that may hinder my full participation in the activity and understand that any false declaration or omission, may impact my health and wellbeing.

I agree to follow all instructions, rules, and regulations in place for the activity I undertake.

I understand that the Ministry of Defence considers claims on the basis of its legal liability to do so in common law. This means that the Ministry of Defence will pay compensation where it can be shown that the Ministry of Defence, its servants or agents, have acted negligently in the course of their official duty.

I understand that I am not covered by the Armed Forces Compensation Scheme (AFCS) and am strongly advised to seek personal accident insurance for this activity, to cover any losses I may incur. I am aware that PAX Insurance has a number of Personal Accident Cover options, and that there are a number of alternative providers available.

I CERTIFY THAT I HAVE READ THIS DOCUMENT AND I FULLY UNDERSTAND ITS CONTENT.

Name:	
Date:	
Activity:	
Signature:	